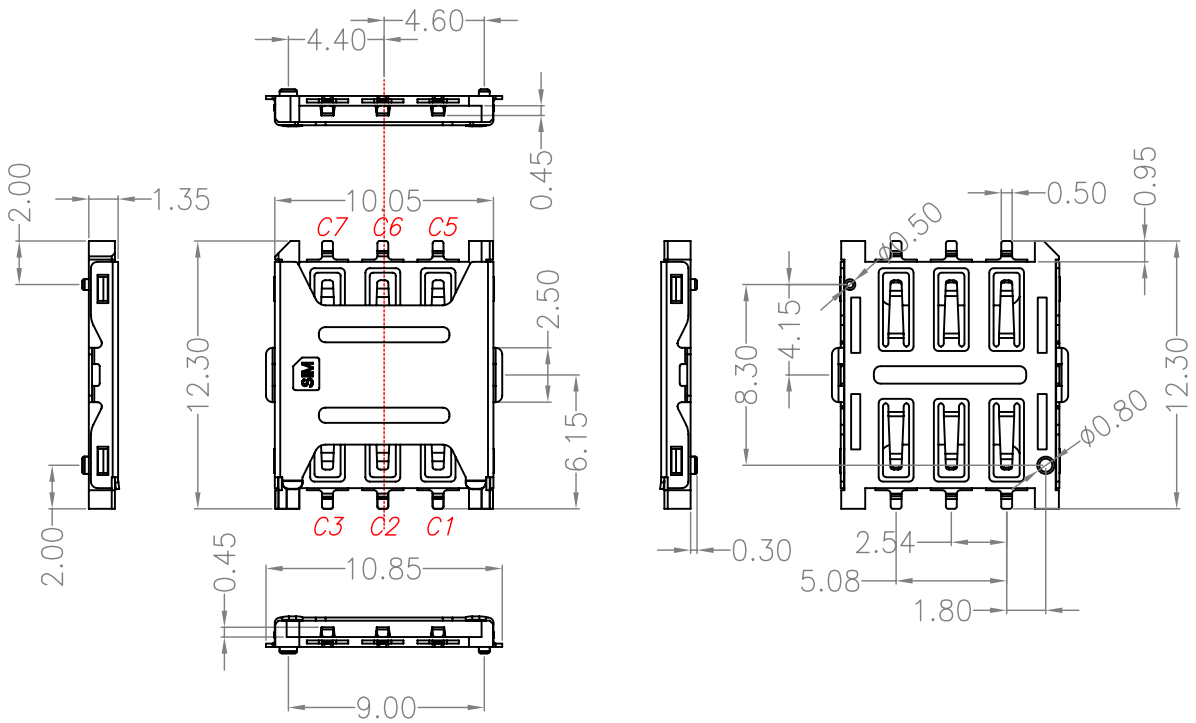

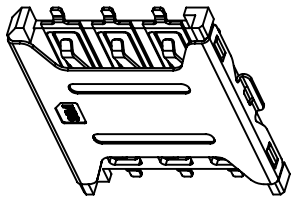

SIM pin assignment	
PIN#	Name
C1	VCC供电电压
C2	RST重置
C3	CLK时钟
C5	GND接地
C6	VPP程序电压
C7	I/O输入输出

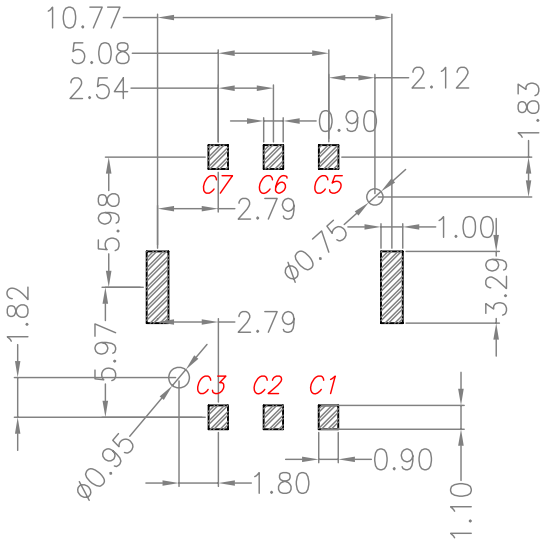

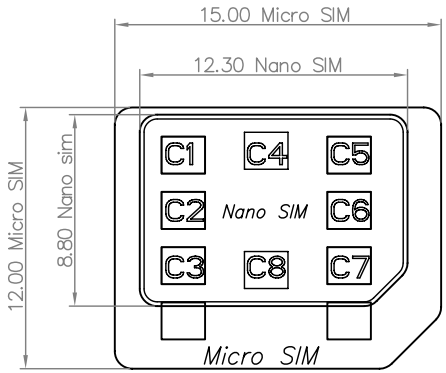

Specification

MATERIAL:

Insulator: High Temperature Thermoplastic, UL 94V-0.
Contact: C5210
SHELL: SUS

PLATING:

Contact: Plated 50u'' Ni Overall Contact ALL Au 1U,
Shell: Plated 50u'' Ni Overall,PAD Au 1U

Electrical:

Current Rating :0.5mA AC/DC max.
Voltage Rating :125V AC/DC
Ambient Temperature Range :-20° C~+60° C
Storage Temperature Range :-40° C~+70° C
Ambient Humidity Range :95% R.H. Max.
Contact Resistance:100mΩmax.
Insulation Resistance:1000MΩmin./500VDC
Mating Cycles:10,000 Insertions
Reflow peak temp.: 260° C ±5° C, 3~5 S

Mating Cycles:3,000 Insertions Min

深圳市山谷道电子有限公司

TOLERANCE: X.X ±0.30, X.XX ±0.25, X.XXX ±0.15, X.° ±2°, X.X° ±0.5°	DRAWED BY : 陈一鸣	DATE : 2014-02-23	PART NAME: NANO SIM NO PUSH 1.35H 带柱
	CHECKED BY: 马跃	DATE : 2014-02-23	PART NO. SGD75-SIM06-135
UNIT: mm [inch]	APPROVED BY: 邱国夷	DATE : 2014-02-23	MOLD NO. / DRAW NO: SGD-SIM15101409
SCALE:1:1 SIZE: A4			SHEET NO. 1 OF 1